AC INDUCTION MOTOR DATA SHEET
UL EXPLOSION PROOF MOTORS

MODEL NUMBER	**IXHHI10-36-215T**
HORSEPOWER	**10**
RPM / POLES	**3600 / 2**
VOLTAGE / PHASE	**230 / 460 V / 3**
FRAME	**215T**
ENCLOSURE / DEGREE OF PROTECTION	**TEFC / IP54**
FREQUENCY	**60 HZ**
FULL LOAD SPEED	**3525 RPM**
SERVICE FACTOR	**1.15**
INSULATION CLASS	**F Class N Varnish**
FULL LOAD AMPS; 230 / 460	**24.0 / 12.0 A Usable On 208 V At 26.5 A**
LOCKED ROTOR CURRENT (% Full Load)	**680 / 680 %**
NEMA CODE LETTER	**H**
EFFICIENCY / POWER FACTOR	LOAD / EFF. / P.F. **100 % / 90.2 % / 87.0 %** **75 % / 90.3 % / 85.0 %** **50 % / 88.0 % / 80.0 %**
DUTY CYCLE	**S1 / Continuous**
TORQUE	FULL LOAD / LRT / BDT **15.0 lb.ft. / 160 % / 260 %**
NEMA DESIGN	**B**
MOMENT OF INERTIA	LOAD (Max.) / MOTOR **37.969 lb.ft.^{2} / 0.451 lb.ft.^{2}**
SOUND PRESSURE LEVEL (No Load 1 M From Motor)	**76 dB(A)**
MAX. SHAFT VIBRATION	**0.08 In/Sec – Peak Velocity**
NUMBER OF STARTS (Hot / Cold)	**2 Hot / 3 Cold**
MAX. ELEVATION	**3300 Ft. Above Sea Level**
TEMPERATURE RISE (At Full Load)	**80° C**
DRIVE-END BEARING	**6307ZZC3**
OPPOSITE DRIVE-END BEARING	**6307ZZC3**
GREASE TYPE	**Mobil Polyrex EM**
MOUNTING	**F1, W6, W8, B3, V5, V6**
ROTATION	**Bi-Directional**
APPROXIMATE WEIGHT	**180 lbs.**
AREA CLASSIFICATION	**Class I, Division 1, Groups C and D**
TEMPERATURE CODE WITH THERMOSTAT USE	**T4**
TEMPERATURE CODE AT 40°C AMBIENT	**T2C**
TEMPERATURE CODE AT 55°C AMBIENT	**T2B**
THERMOSTAT TYPE	**Normally Closed**
INVERTER RATING	**6:1 CT (Constant) / 10:1 CT (Intermittent-1 Hour) / 10:1 VT**
INSULATION TYPE	**Hyundai Inverter Shield, Meets NEMA MG1 Part 31**
UL CERTIFICATION NUMBER	**E216236**

EEV 109973

CC 038A

REVISED 04/01/14

HYUNDAI HEAVY INDUSTRIES CO., LTD.	TEFC THREE PHASE INDUCTION MOTOR	TYPE	XKP,XIP CAST IRON FRAME

FRAME SIZE	OUTPUT(HP)	POLES	Hz	TIME RATING

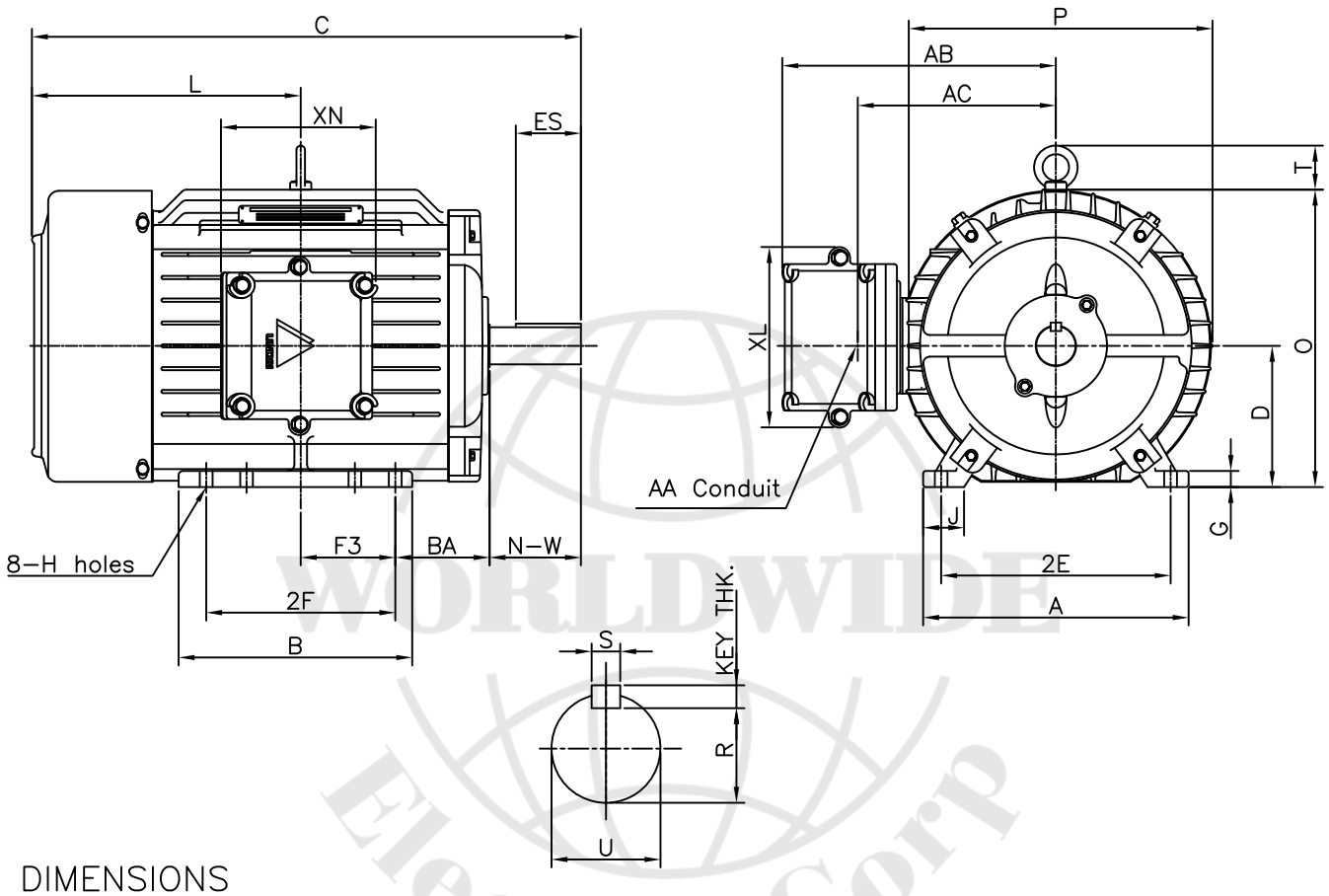

DIMENSIONS

MOUNTING									CONDUIT BOX						APPROX. WGT.(lb)
A	B	2E	2F	–	F3	G	J	H	AA	AB	AC	XB	XL	XN	
9.84	8.66	8.50	7.00	–	3.50	0.60	1.52	0.41	1.00	10.15	7.35	–	6.69	5.98	180

OVERALL							SHAFT					KEY THK.	BEARING	
BA	C	D	L	O	P	T	U	N-W	KEYWAY				DRIVE END	OPP. DRIVE END
									R	ES	S			
3.50	20.36	5.25	9.97	11.02	11.26	1.63	1.375	3.38	1.201	2.41	0.312	0.312	6307ZZC3	6307ZZC3

NOTE

1. Dimension "D" tolerance : +0.00inch – 0.03inch
2. Dimension "U" tolerance : +0.000inch – 0.0005inch
3. Dimension "R" tolerance : +0.000inch – 0.015inch

APPD BY	J.H.KIM	UNIT	INCH	SUBJECT	NEMA 215T	CAD PROJ \ FILE LM-U1215B3TL001
CHKD BY	N.D.LEE	SCALE	1/8	TITLE	OUTLINE	
CHKD BY	K.S.LEE	PROJEC'N	3rd Angle			
DSND BY	S.W.SEO	DATE	2012.02.11			

HYUNDAI HEAVY INDUSTRIES CO., LTD. Electro-Electric System Division	REF. NO	LM-U1215B3TL001	Sheet No. of
	DWG NO	LM-U1215B3TL001	Revision No. 0

WORLDWIDE Electric Corp