AC INDUCTION MOTOR DATA SHEET
IEEE-841 MOTORS

MODEL NUMBER	**IEEE1-12-145T**
HORSEPOWER	**1**
RPM / POLES	**1200 / 6**
VOLTAGE / PHASE	**460 / 3**
FRAME	**145T**
ENCLOSURE / DEGREE OF PROTECTION	**TEFC / IP55**
FREQUENCY	**60 HZ**
FULL LOAD SPEED	**1140 RPM**
SERVICE FACTOR	**1.15**
INSULATION CLASS	**F Class N Varnish**
FULL LOAD AMPS	**1.8 A**
LOCKED ROTOR CURRENT (% Full Load)	**800 %**
NEMA CODE LETTER	N
EFFICIENCY / POWER FACTOR	LOAD / EFF. / P.F. **100 % / 82.5 % / 65.0 %** **75 % / 82.7 % / 53.0 %** **50 % / 79.0 % / 39.0 %**
DUTY CYCLE	**S1 / Continuous**
TORQUE	FULL LOAD / LRT / BDT **4.6 lb.ft / 180 % / 275 %**
NEMA DESIGN	**B**
MOMENT OF INERTIA	LOAD (Max.) / MOTOR **47.461 lb.ft^2 / 0.083 lb.ft^2**
SOUND PRESSURE LEVEL (No Load 1 M From Motor)	**55 dB(A)**
MAX. SHAFT VIBRATION	**0.08 In/Sec – Peak Velocity**
NUMBER OF STARTS (Hot / Cold)	**2 Hot / 3 Cold**
MAX. AMBIENT TEMPERATURE	**40° C**
MAX. ELEVATION	**3300 Ft. Above Sea Level**
TEMPERATURE RISE (At Full Load)	**80° C**
DRIVE-END BEARING	**6205ZC3**
OPPOSITE DRIVE-END BEARING	**6204ZC3**
BEARING SEAL TYPE	**ProTech™ IP66 Labyrinth On DE and ODE**
GREASE TYPE	**Mobil Polyrex EM**
MOUNTING	**F1 (F2 Suitable), W6, W8, B3, V5, V6**
ROTATION	**Bi-Directional**
APPROXIMATE WEIGHT	**55 lbs**
AREA CLASSIFICATION	**Class I, Division 2, Groups A, B, C, D, T3A**
PAINT	**Epoxy**
INVERTER RATING	**10:1 CT / 1000:1 VT**
INSULATION TYPE	**Hyundai Inverter Shield, Meets NEMA MG1 Part 31**
SPECIFICATION - In Accordance With	**IEEE-841, Version 2009, NEMA, CSA**

EEV 109973

CC 038A

REVISED 08/01/13

HYUNDAI HEAVY INDUSTRIES CO., LTD.	I E E E 8 4 1 TEFC THREE PHASE INDUCTION MOTOR	TYPE	PLP CAST IRON FRAME

FRAME SIZE	OUTPUT(HP)	POLES	Hz	TIME RATING

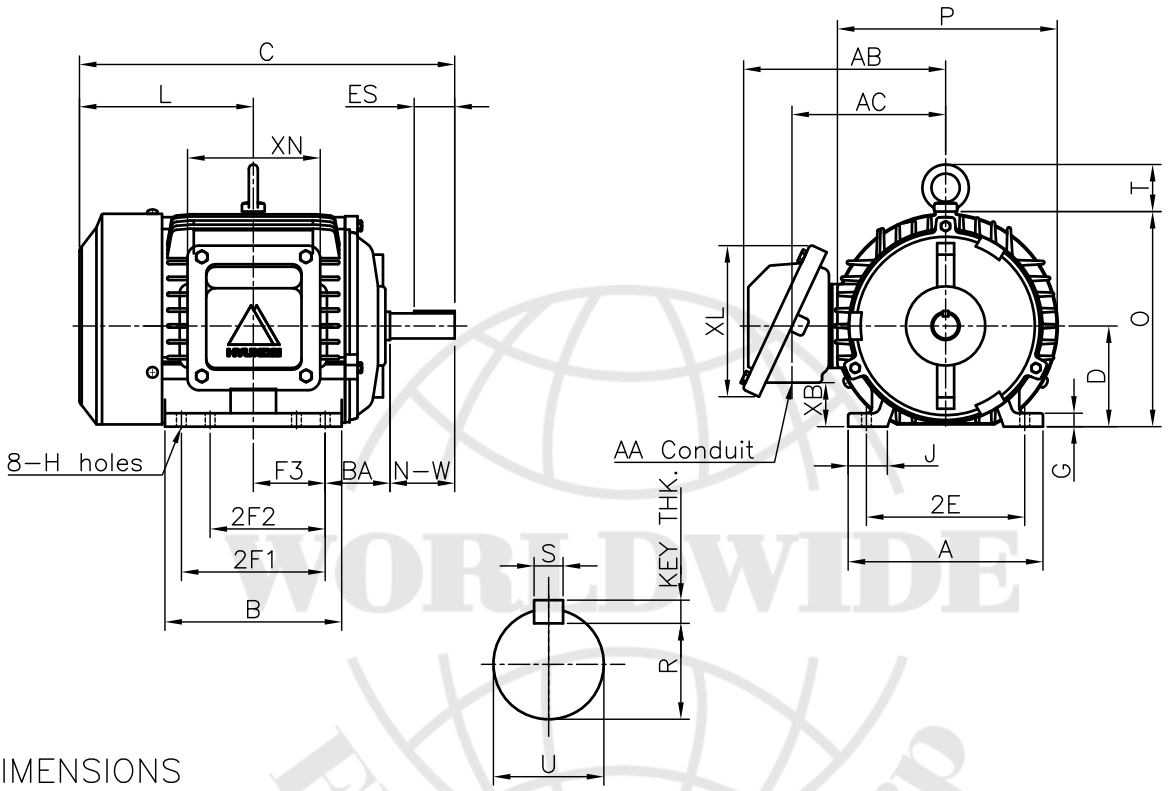

DIMENSIONS

MOUNTING									CONDUIT BOX						APPROX. WGT.(LB)
A	B	2E	2F1	2F2	F3	G	J	H	AA	AB	AC	XB	XL	XN	
6.78	6.15	5.50	5.00	4.00	2.50	0.47	1.36	0.34	0.75	7.02	5.34	1.53	5.26	4.61	55

OVERALL							SHAFT					KEY THK.	BEARING	
BA	C	D	L	O	P	T	U	N-W	KEYWAY				DRIVE END	OPP. DRIVE END
									R	ES	S			
2.25	13.05	3.50	6.05	7.46	7.64	1.63	0.875	2.25	0.771	1.41	0.188	0.188	6205ZC3	6204ZC3

NOTE

1. Dimension "D" tolerance : +0.00inch – 0.03inch
2. Dimension "U" tolerance : +0.000inch – 0.0005inch
3. Dimension "R" tolerance : +0.000inch – 0.015inch

APPD BY	J.H.KIM	UNIT	INCH	SUBJECT	NEMA 145T	CAD PROJ \ FILE SCALE-NEMA\A1102AA
CHKD BY	N.D.LEE	SCALE	1/8	TITLE	OUTLINE	
CHKD BY	K.S.LEE	PROJEC'N	3rd Angle			
DSND BY	S.W.SEO	DATE	2010.12.20			
HYUNDAI HEAVY INDUSTRIES CO., LTD. Electro-Electric System Division				REF. NO	350A8102AA	Sheet No. of
				DWG NO	350A8102AA	Revision No. 0

WORLDWIDE Electric Co.,

HYUNDAI HEAVY INDUSTRIES CO.,LTD.	PERFORMANCE CURVE	CURVE NO. P-PLP145SR3

Type :	PLP		0.75 kW	1 HP	60 Hz
Full Load Torque :	4.6	lb.ft	6 P	Rated Speed :	1140 RPM
Motor moment of Inertia (J) :	0.083	lb.ft ^{2}	Rated Voltage	460V	
Load moment of Inertia (J) :	47.461	lb.ft ^{2}	Full Load Current	1.8A	

SPEED VS TORQUE & CURRENT CURVE

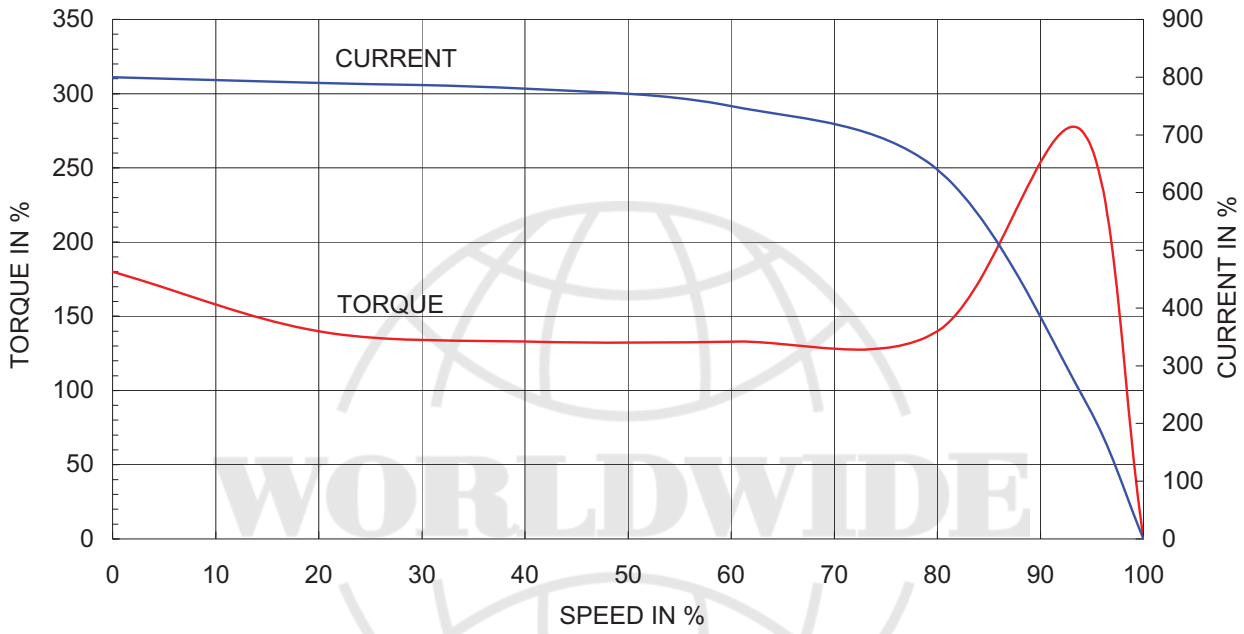

OUTPUT VS EFF., P.F & CURRENT CURVE

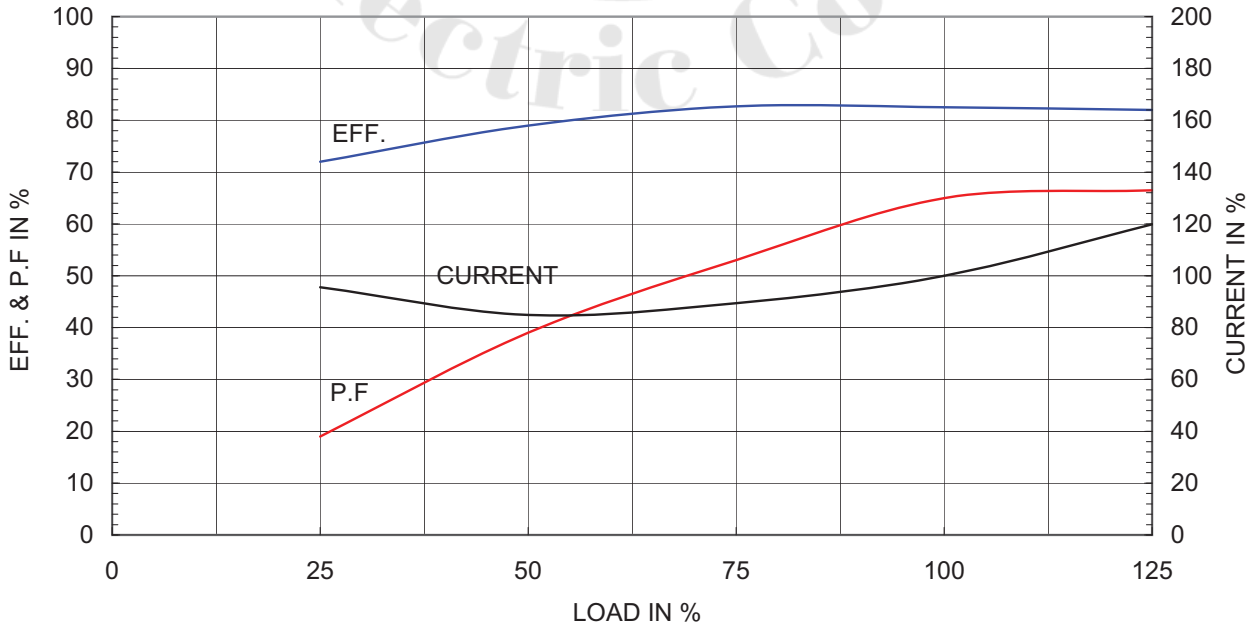

WORLDWIDE Electric CoTP