AC INDUCTION MOTOR DATA SHEET
CROWN TRITON™ MOTORS

MODEL NUMBER	**HHI20-12-286T**
HORSEPOWER	**20**
RPM / POLES	**1200 / 6**
VOLTAGE / PHASE	**230 / 460 V / 3**
FRAME	**286T**
ENCLOSURE / DEGREE OF PROTECTION	**TEFC / IP54**
FREQUENCY	**60 HZ**
FULL LOAD SPEED	**1175 RPM**
SERVICE FACTOR	**1.15 SF at 40° C / 1.0 SF at 65° C**
INSULATION CLASS	**F Class N Varnish**
FULL LOAD AMPS; 230 / 460	**53.4 / 26.7 A Usable On 208 V At 59.0 A**
LOCKED ROTOR CURRENT (% Full Load)	**660 / 660 %**
NEMA CODE LETTER	**H**
EFFICIENCY / POWER FACTOR	LOAD / EFF. / P.F. **100 % / 91.7% / 77.0 %** **75 % / 91.8 % / 73.0 %** **50 % / 91.2 % / 64.5 %**
DUTY CYCLE	**S1 / Continuous**
TORQUE	FULL LOAD / LRT / BDT **89.9 lb.ft. / 150 % / 230 %**
NEMA DESIGN	**B**
MOMENT OF INERTIA	LOAD (Max.) / MOTOR **628.858 lb.ft.^{2} / 6.100 lb.ft.^{2}**
SOUND PRESSURE LEVEL (No Load 1 M From Motor)	**67 dB(A)**
NUMBER OF STARTS (Hot / Cold)	**2 Hot / 3 Cold**
MAX. AMBIENT TEMPERATURE	**40° C at 1.15 SF / 65° C at 1.0 SF**
MAX. ELEVATION	**3300 Ft. Above Sea Level**
TEMPERATURE RISE (At Full Load)	**80° C**
DRIVE-END BEARING	**6310ZC3**
OPPOSITE DRIVE-END BEARING	**6310ZC3**
GREASE TYPE	**Mobil Polyrex EM**
MOUNTING	**F1 (F2 Suitable), W6, W8, B3, V5, V6**
ROTATION	**Bi-Directional**
APPROXIMATE WEIGHT	**410 lbs.**
AREA CLASSIFICATION	**Class I, Division 2, Groups A, B, C, D**
INVERTER RATING	**10:1 CT / 20:1 VT**
SPECIFICATION - In Accordance With	**NEMA, CSA**

C US EEV 109973 CC 038A

REVISED 08/20/13

HYUNDAI HEAVY INDUSTRIES CO., LTD.

TEFC

THREE PHASE INDUCTION MOTOR

TYPE	LP, JP
	CAST IRON FRAME

FRAME SIZE	OUTPUT(HP)	POLES	Hz	TIME RATING

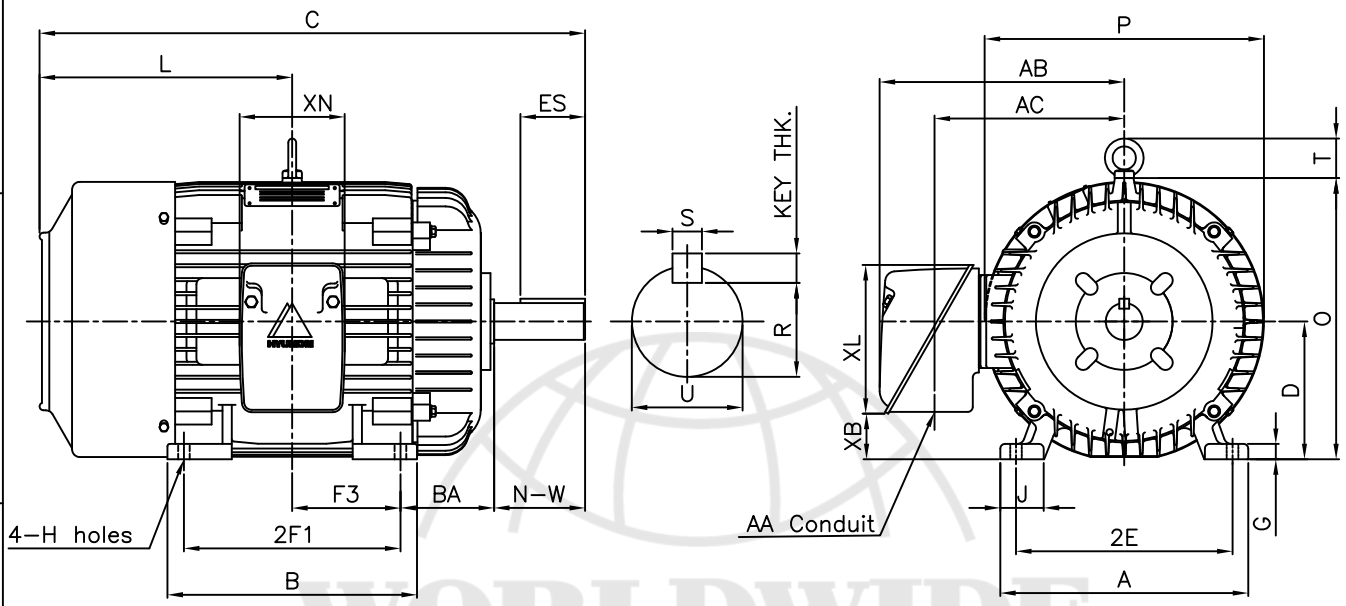

DIMENSIONS

MOUNTING									CONDUIT BOX						APPROX. WGT.(LB)
A	B	2E	2F1	2F2	F3	G	J	H	AA	AB	AC	XB	XL	XN	286T
12.60	12.68	11.00	11.00	–	5.50	0.78	2.20	0.53	1.50	12.43	9.64	3.42	7.56	6.61	410

OVERALL							SHAFT					KEY THK.	BEARING	
BA	C	D	L	O	P	T	U	N–W	KEYWAY				DRIVE END	OPP. DRIVE END
									R	ES	S			
4.75	27.71	7.00	12.84	14.28	14.19	2.01	1.875	4.62	1.591	3.28	0.500	0.500	6310ZC3	6310ZC3

NOTE

1.Dimension "D" tolerance : +0.00inch – 0.03inch
2.Dimension "U" tolerance : +0.000inch – 0.001inch
3.Dimension "R" tolerance : +0.000inch – 0.015inch

APPD BY	J. H. KIM	UNIT	INCH
CHKD BY	K. S. LEE	SCALE	1/10
CHKD BY		PROJEC'N	3rd Angle
DSND BY	KIM IN KYU	DATE	2010.12.31

SUBJECT	NEMA 286T	CAD PROJ \ FILE
		XSMOUTN\A1110AA

TITLE: OUTLINE

HYUNDAI HEAVY INDUSTRIES CO., LTD.
Electro–Electric System Division

REF. NO	A1110AA	Sheet No. of
DWG NO	350A1110AA	Revision No. 0

WORLDWIDE

HYUNDAI HEAVY INDUSTRIES CO.,LTD.

PERFORMANCE CURVE

CURVE NO.

P-PLP286SR3

Type :	PLP		
Full Load Torque :	89.9	lb.ft	
Motor moment of Inertia (J) :	6.100	lb.ft ^{2}	
Load moment of Inertia (J) :	628.858	lb.ft ^{2}	

15 kW	20 HP	60 Hz		
6 P	Rated Speed :	1175 RPM		
Rated Voltage	575V	460V	230V	
Full Load Current	21.4A	26.7A	53.4A	

SPEED VS TORQUE & CURRENT CURVE

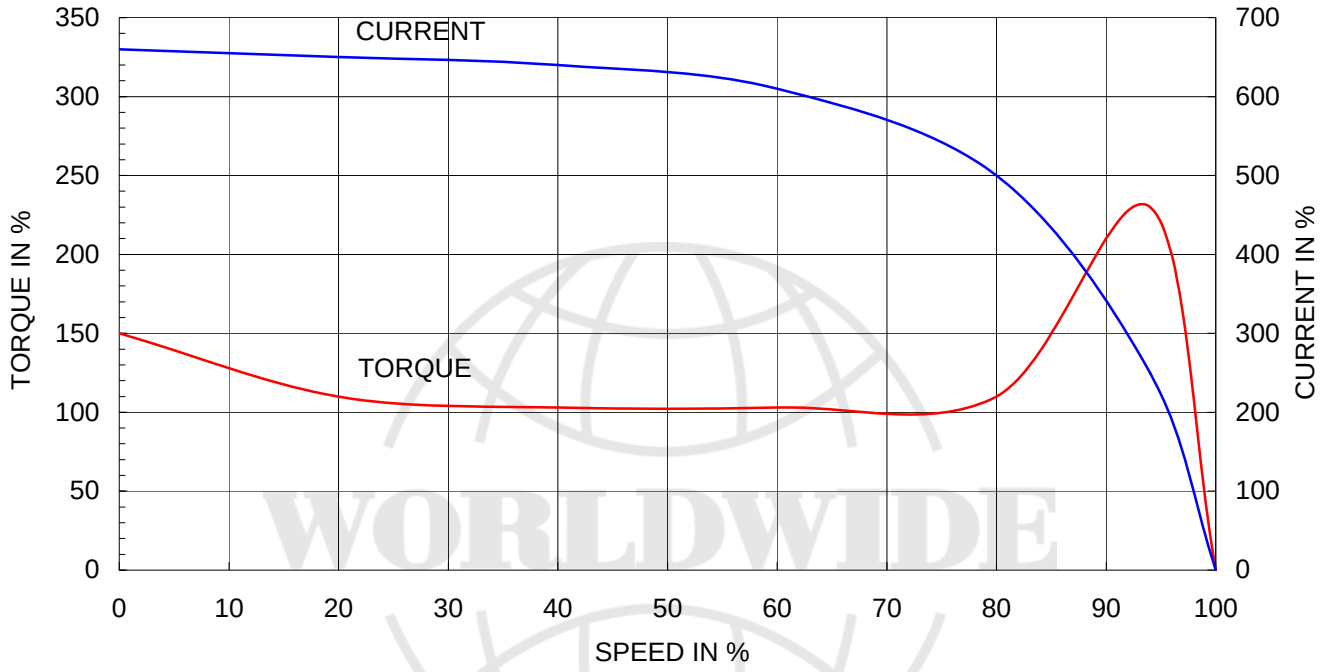

OUTPUT VS EFF., P.F & CURRENT CURVE

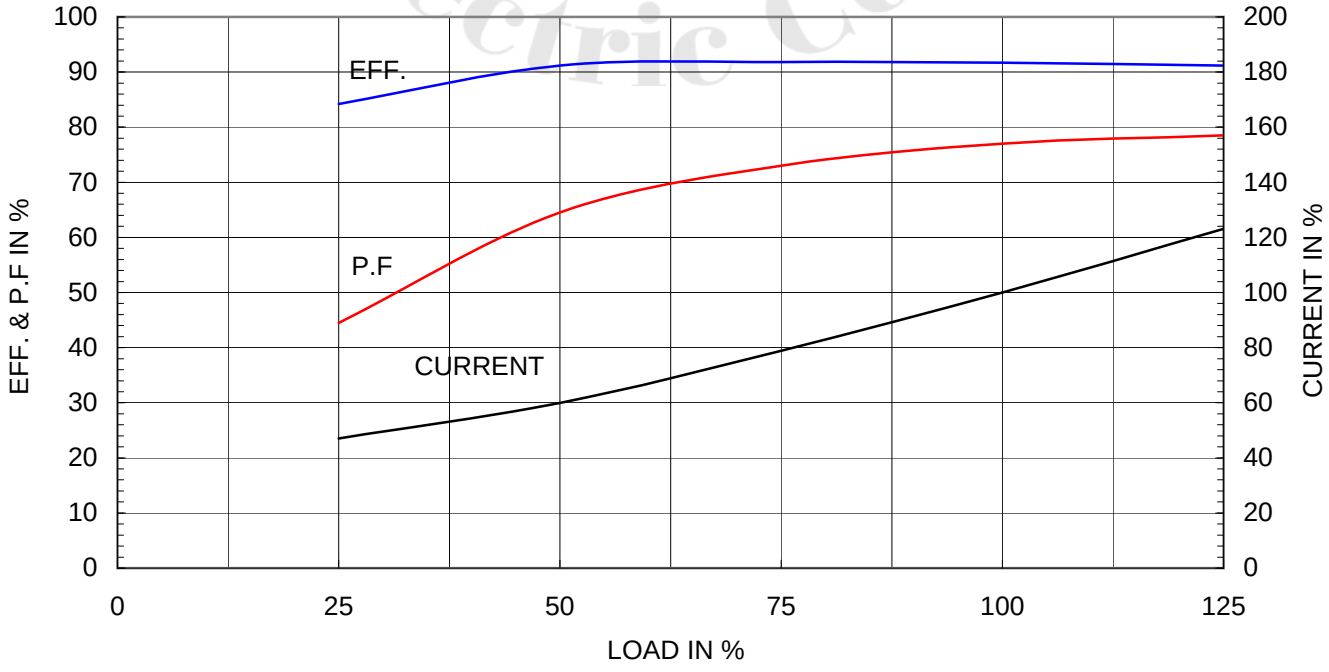

WORLDWIDE Electric Corp