# AC INDUCTION MOTOR DATA SHEET
# CROWN TRITON™ MOTORS

| | |
|---|---|
| MODEL NUMBER | **HHI75-12-405T** |
| HORSEPOWER | **75** |
| RPM / POLES | **1200 / 6** |
| VOLTAGE / PHASE | **230 / 460 V / 3** |
| FRAME | **405T** |
| ENCLOSURE / DEGREE OF PROTECTION | **TEFC / IP54** |
| FREQUENCY | **60 HZ** |
| FULL LOAD SPEED | **1185 RPM** |
| SERVICE FACTOR | **1.15 SF at 40° C / 1.0 SF at 65° C** |
| INSULATION CLASS | **F Class N Varnish** |
| FULL LOAD AMPS; 230 / 460 | **173.9 / 87.0 A** |
| LOCKED ROTOR CURRENT (% Full Load) | **680 / 680 %** |
| NEMA CODE LETTER | **G** |
| EFFICIENCY / POWER FACTOR | LOAD / EFF. / P.F.<br>**100 % / 94.5 % / 84.0 %**<br>**75 % / 94.7 % / 81.1 %**<br>**50 % / 94.2 % / 73.2 %** |
| DUTY CYCLE | **S1 / Continuous** |
| TORQUE | FULL LOAD / LRT / BDT<br>**327.0 lb.ft. / 140 % / 220 %** |
| NEMA DESIGN | **B** |
| MOMENT OF INERTIA | LOAD (Max.) / MOTOR<br>**2670.866 lb.ft.$^2$ / 55.310 lb.ft.$^2$** |
| SOUND PRESSURE LEVEL ( No Load 1 M From Motor) | **74 dB(A)** |
| NUMBER OF STARTS (Hot / Cold) | **2 Hot / 3 Cold** |
| MAX. AMBIENT TEMPERATURE | **40° C at 1.15 SF / 65° C at 1.0 SF** |
| MAX. ELEVATION | **3300 Ft. Above Sea Level** |
| TEMPERATURE RISE (At Full Load) | **80° C** |
| DRIVE-END BEARING | **NU316** |
| OPPOSITE DRIVE-END BEARING | **6313C3** |
| GREASE TYPE | **Mobil Polyrex EM** |
| MOUNTING | **F1 (F2 Suitable), W6, W8, B3, V5, V6** |
| ROTATION | **Bi-Directional** |
| APPROXIMATE WEIGHT | **1220 lbs.** |
| AREA CLASSIFICATION | **Class I, Division 2, Groups A, B, C, D** |
| INVERTER RATING | **10:1 CT / 20:1 VT** |
| SPECIFICATION - In Accordance With | **NEMA, CSA** |

EEV 109973

CC 038A

REVISED 08/01/13

HYUNDAI HEAVY INDUSTRIES CO., LTD.

본 도면은 현대중공업(주) 재산이므로 허가없이 복사할 수 없음 (취급유의)

THIS DRAWING IS PROPRIETARY TO HEECO. NO PART OF THIS DRAWING MAYBE REPRODUCED WITHOUT THE PERMISSION OF HHI.

HYUNDAI HEAVY INDUSTRIES CO., LTD.

# T E F C

## THREE PHASE INDUCTION MOTOR

| TYPE | LP, JP |
|---|---|
| | Cast iron frame |

| FRAME SIZE | OUTPUT(HP) | POLES | Hz | TIME RATING |
|---|---|---|---|---|
| 405T | | | 60 | CONT |

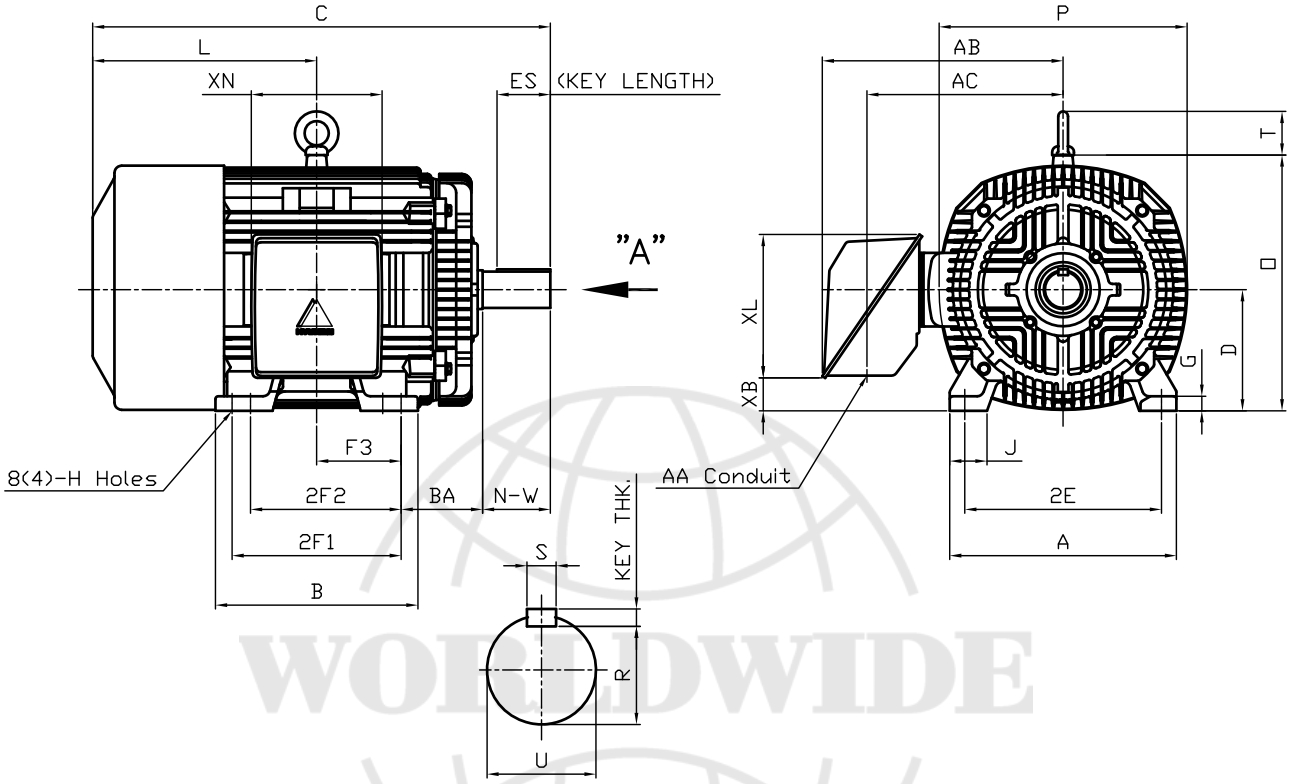


## DIMENSIONS

VIEW "A"

| MOUNTING | | | | | | | | | CONDUIT BOX | | | | | | APPROX. WGT.(LB) |
|---|---|---|---|---|---|---|---|---|---|---|---|---|---|---|---|
| A | B | 2E | 2F1 | 2F2 | F3 | G | J | H | AA | AB | AC | XB | XL | XN | |
| 18.43 | 16.46 | 16.00 | 13.75 | (12.25) | 6.870 | 1.18 | 3.03 | 0.81 | 3.00 | 20.28 | 14.85 | 2.83 | 11.65 | 10.63 | 1110 |

| OVERALL | | | | | | | SHAFT | | | | | KEY | BEARING | |
|---|---|---|---|---|---|---|---|---|---|---|---|---|---|---|
| BA | C | D | L | O | P | T | U | N-W | KEYWAY R | KEYWAY ES | KEYWAY S | THK. | DRIVE END | OPP. DRIVE END |
| 6.62 | 39.42 | 10.00 | 18.68 | 20.79 | 20.16 | 3.55 | 2.875 | 7.25 | 2.450 | 5.65 | 0.750 | 0.750 | 6316C3 or NU316 | 6313C3 |

### NOTE

1. Dimension "D" tolerance : +0.00inch – 0.03inch (143T–365T) ; +0.000inch – 0.06inch (404T–449T)
2. Dimension "U" tolerance : +0.000inch – 0.005inch (143T–215T), +0.000inch – 0.001inch (254T–449T)
3. Dimension "R" tolerance : +0.000inch – 0.015inch

| Q'TY | DESCRIPTION | MATERIAL | DIMENSION | WEIGHT | PART NO. | REMARK | NO. |
|---|---|---|---|---|---|---|---|

| | | | |
|---|---|---|---|
| APPD BY | K.J. Kang | UNIT | INCH |
| Q.P CHK | | SCALE | N/S |
| CHKD BY | | PROJEC'N | 3 각법(3rd Angle) |
| DSND BY | N.D.Lee | DATE | 2011.01.12 |

| | | |
|---|---|---|
| SUBJECT | 405T | CAD PROJ 명 \ FILE 명 MMSTDMTR\A1116AA |
| TITLE | OUTLINE | |
| REF. NO | A1116AA | Sheet No. of |
| DWG NO | 350A1116AA | Revision No. 0 |

HYUNDAI HEAVY INDUSTRIES CO., LTD.

| HYUNDAI HEAVY INDUSTRIES CO.,LTD. | PERFORMANCE CURVE | CURVE NO. |
|---|---|---|
| | | P-PLP405SR06 |

| | | |
|---|---|---|
| Type : | PLP | |
| Full Load Torque : | 327.0 | lb.ft |
| Motor moment of Inertia (J) : | 55.310 | lb.ft $^2$ |
| Load moment of Inertia (J) : | 2670.866 | lb.ft $^2$ |

| | | | | |
|---|---|---|---|---|
| 55 kW | 75 HP | | 60 Hz | |
| 6 P | Rated Speed : | | 1185 RPM | |
| Rated Voltage | 575V | 460V | 230V | |
| Full Load Current | 69.6A | 87.0A | 173.9A | |

SPEED VS TORQUE & CURRENT CURVE

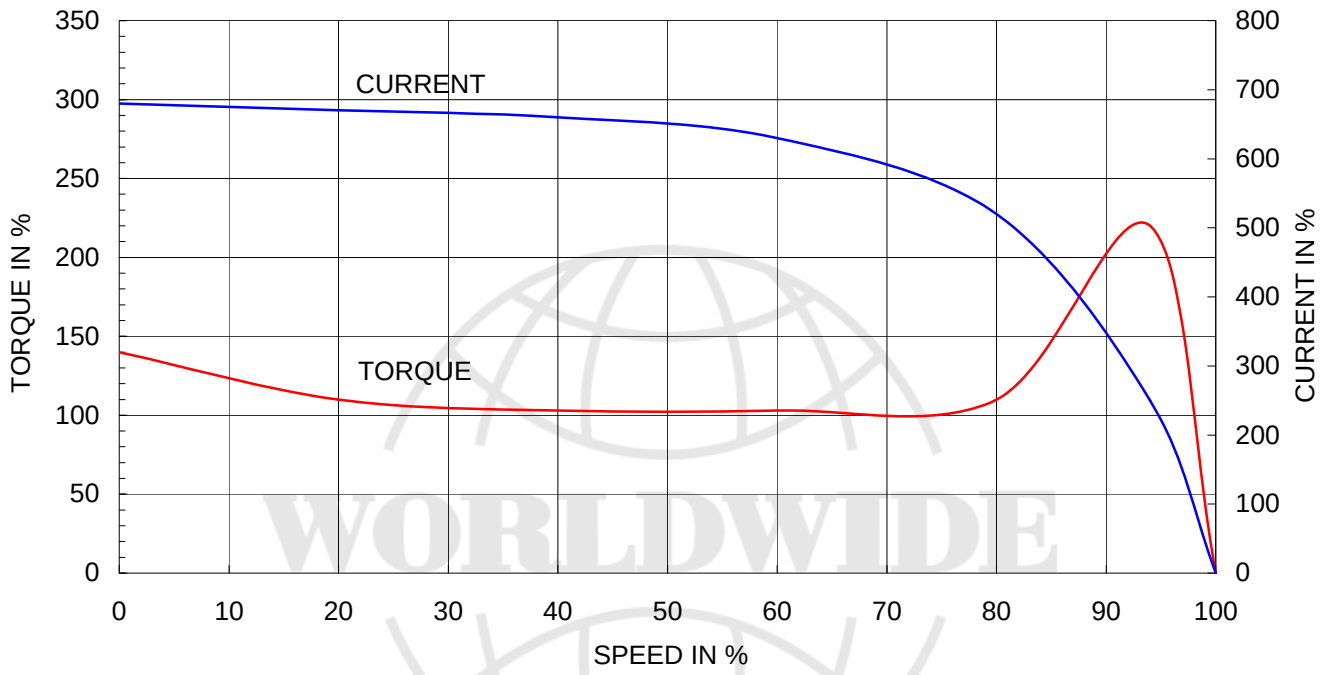


OUTPUT VS EFF., P.F & CURRENT CURVE

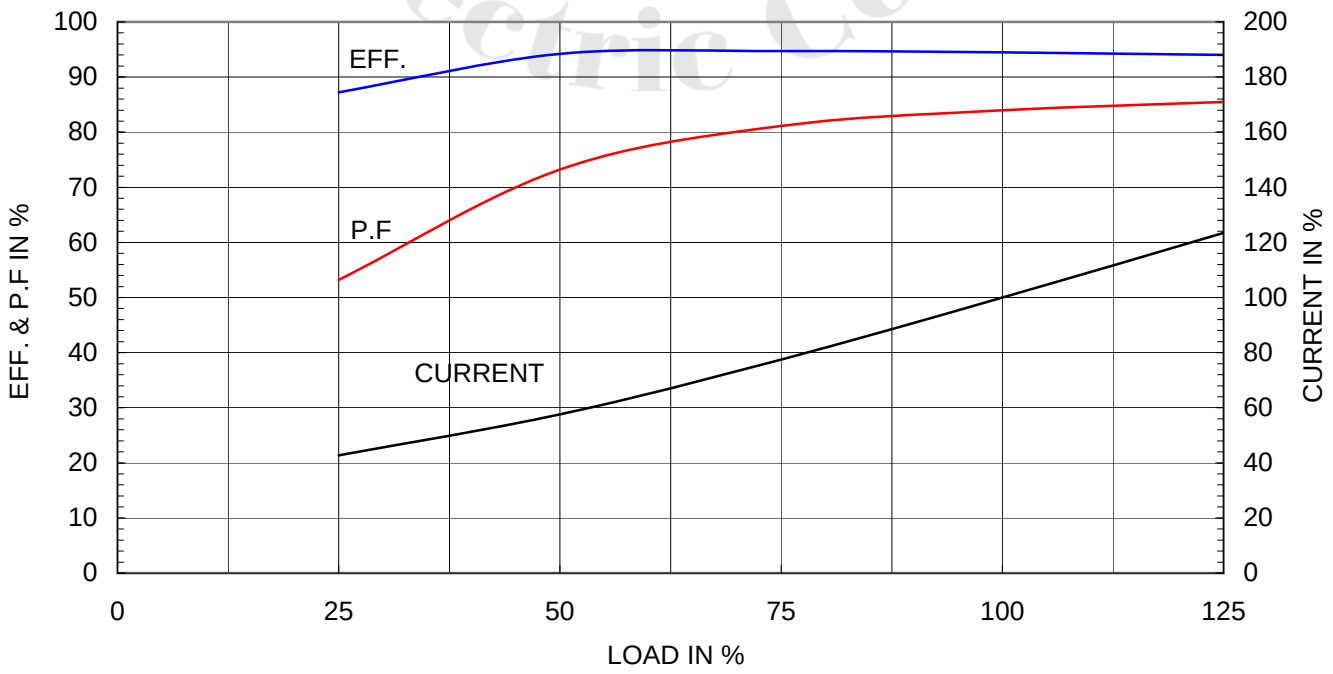


WORLDWIDE Electric Corp.